IOPscience iopscience.iop.org

Home Search Collections Journals About Contact us My IOPscience

A four-electrode low frequency impedance spectroscopy measurement system using the AD5933 measurement chip

This content has been downloaded from IOPscience. Please scroll down to see the full text.

2013 Physiol. Meas. 34 391

(http://iopscience.iop.org/0967-3334/34/4/391)

View the table of contents for this issue, or go to the journal homepage for more

Download details:

IP Address: 193.50.135.4
This content was downloaded on 26/08/2014 at 15:06

Please note that terms and conditions apply.

IOP PUBLISHING PHYSIOLOGICAL MEASUREMENT

Physiol. Meas. **34** (2013) 391–405 doi:10.1088/0967-3334/34/4/391

A four-electrode low frequency impedance spectroscopy measurement system using the AD5933 measurement chip

C Margo[1], J Katrib[2], M Nadi[3] and A Rouane[3]

[1] LPEM, UMR8213, ESPCI-ParisTech, 10 Rue Vauquelin, 75005 Paris, France
[2] The National Centre for Industrial Microwave Processing, Nottingham, UK
[3] Institut Jean Lamour, UMR 7198, Université de Lorraine, CNRS, Nancy, France

E-mail: cedric.margo@espci.fr

Received 16 July 2012, accepted for publication 15 February 2013
Published 13 March 2013
Online at stacks.iop.org/PM/34/391

Abstract
This paper presents the design of a four electrode impedance measurement circuit dedicated to bioimpedance embedded applications. It extends the use of the AD5933 measurement chip to allow it to operate in a four electrode configuration in order to limit the effects of the parasitic impedances between the medium under test and the electrodes. The circuit has shown a good measurement accuracy on various test circuits. In association with a four microband electrode system it has been successfully used to characterize small physiological samples (50 μl) with conductivities ranging from 0.14 to 1.2 S m^{-1}. It can be used as an alternative bioimpedance measurement approach for embedded applications operating in the four electrode configuration.

Keywords: impedance spectroscopy, system-on-chip, artifact impedance, four electrode measurement

(Some figures may appear in colour only in the online journal)

1. Introduction

Bioimpedance measurements have been traditionally widely used to determine the passive electrical properties (conductivity, permittivity) of various biological tissues (McAdams and Jossinet 1995, Foster and Schwan 1996, Gabriel *et al* 1996, Nadi 2008) but they can also be used for practical applications (impedance tomography, fat content estimation, etc) (Bodenstein *et al* 2009, Pethig 1984, Grimnes and Martinsen 2000, Rigaud *et al* 1996). In recent years, more effort has been made to apply impedance measurement techniques to microscopic scales, with many promising applications, for example the use of impedance spectrometry in a microfluidic channel for counting and characterizing single cells as they flow in the channel (Cheung *et al* 2005, Sohm *et al* 2000, Ayliffe *et al* 1999), or the use of impedance spectrometry to monitor

 © 2013 Institute of Physics and Engineering in Medicine Printed in the UK & the USA

physiological changes (migration, proliferation, apoptosis, etc), in cell cultures or small tissue samples (Thielecke 2003, Wegener *et al* 2000, Ehret *et al* 1998, Arndt *et al* 2004). Although the measuring electrodes for these applications can be easily reduced to the microscopic scale of a single cell, the whole impedance measurement equipment still remains large and not easily portable. To develop new applications, the miniaturization of the electronic circuit is necessary in order to provide ready-to-use portable diagnostic tools (point of care diagnostic) (Mascareas 2006) or even *in vivo* wearable monitoring systems (i.e. intelligent textiles) (Ferreira *et al* 2011, Schlebusch *et al* 2010). In this paper, a small and portable impedance processing system is presented. The designed system uses an impedance measurement chip, AD5933, commercialized by Analog Devices. A new extension of this circuit is provided to meet the specific constraints of bio-impedance measurements on a microscopic scale. Mainly, the circuit has been adapted to operate in a tetrapolar configuration in order to limit the influence of the electrode–medium interface impedance which is well-known as a major parasitic influence in bioimpedance measurements (McAdams and Jossinet 1991, Grimnes and Martinsen 2000). After a brief presentation of the AD5933 chip, the extension circuit proposed will be presented and its efficiency will be determined by making measurements on test circuits. Then, the ability of the system to measure the impedance of common physiological samples with a set of tetrapolar microelectrodes will be shown.

2. AD5933 impedance spectrometer chip

2.1. Principle of operation

The designed measurement system was built around the AD5933 impedance spectrometer chip, a fully integrated impedance spectrometer chip, commercialized by Analog Devices. It integrates, in a small package, the main parts of an impedance spectroscopy measurement chain and it is fully configurable with a serial i2c interface. Its synoptic diagram is pictured in figure 1.

On this diagram, Z_x is the unknown impedance to be measured. The structure of the circuit can be divided into three main parts.

- The voltage excitation stage, built on a DDS Core to numerically synthesize a sinusoidal signal at a desired frequency, a digital analogue converter and an output adjustable amplifier. The excitation signal V_{out} (see figure 1) is a sinusoidal voltage signal for which frequency can vary from 1 to 100 kHz, and amplitude voltage from 198 mVpp to 1.98 Vpp depending on the user settings through the serial interface. Note that the output impedance of the AD5933 can vary from 200 Ω to 2.4 kΩ, depending on the range selected
- The current measurement stage, which relies on a current–voltage converter amplifier. The current conversion resistor RFB (see figure 1) can be connected externally by the user. The amplifier is followed by a programmable gain amplifier, an anti-aliasing filter and a 12 bit analogue to digital converter.
- A discrete Fourier transform (DFT) algorithm section, which uses a DSP engine (MAC) to estimate the spectral power of the measured current at the corresponding excitation frequency.

The measurement process consists essentially of exciting the impedance Z_x with a known voltage and a known frequency, then measuring the current flowing through the unknown impedance and computing its complex (both the real and imaginary part) TFD coefficient (at the excitation frequency). The operation is repeated for as many excitation frequencies as desired by driving the i2c interface. For any given configuration, the TFD coefficient, which is

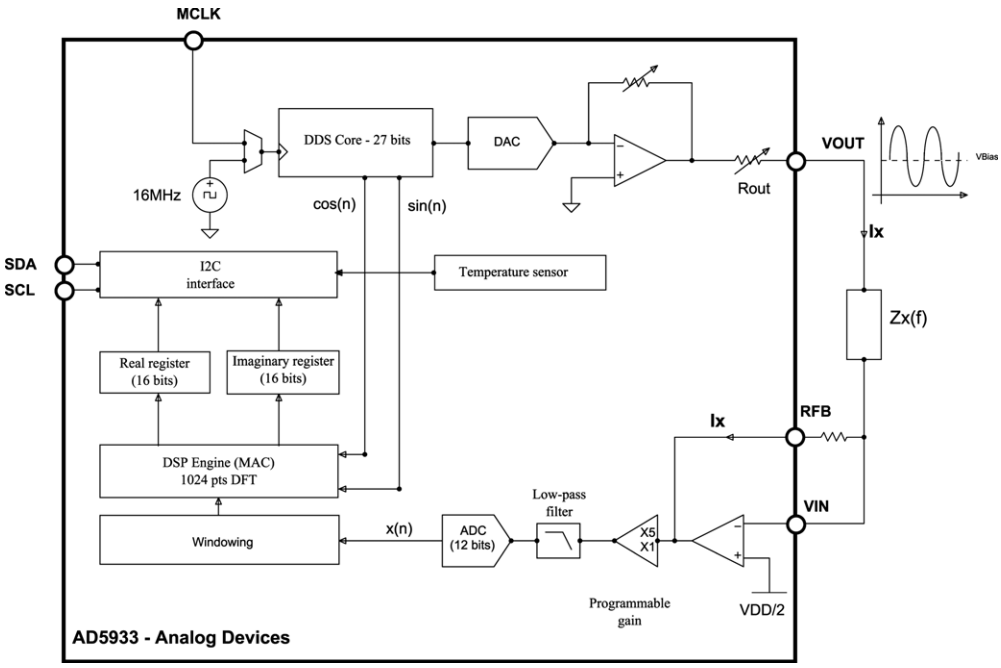

Figure 1. AD5933 principle of operation.

an image of the complex current Ix, is inversely proportional to the unknown impedance. The proportionality factor can be deduced from a previous measurement on a known impedance in the same configuration (excitation voltage and frequency, gain settings). Thus, by sweeping the frequency range of interest, one can easily measure and compute the impedance spectrum of the sample. More details on the principle of operation of the chip and its use for different situations can be found in a number of papers listed here (Brennan 2006, Analog Devices 2007, Analog Devices 2008, Ferreira *et al* 2010, He *et al* 2011, Majer *et al* 2009, Seunghee *et al* 2006).

2.2. Using the AD5933 for bioimpedance measurements

Although the AD5933 chip is a very useful integrated chip, it suffers from some drawbacks that currently prevent its use for bioimpedance measurements, specifically at low frequencies and on a microscopic scale. Firstly, the excitation signal output from the chip varies around a positive dc bias. For many applications, this is not a problem, but the presence of this dc bias, at the interface between the metal electrodes and an aqueous solution, can lead to an electrochemical process that, if maintained for a sufficiently long time, may alter the medium to be measured (Grimnes and Martinsen 2000). To prevent this effect from occurring, the excitation signal must be coupled alternatively. Secondly, the minimum amplitude voltage for the excitation signal is 198 mVpp. This level, acceptable for numerous applications, might be excessive for impedance measurements at microscopic scales. Such a voltage applied to electrodes, for which the contact area is reduced to micrometric dimensions, may induce a nonlinear current density (McAdams *et al* 1995). Moreover, a high local current density could be invasive, especially when working with biological materials (single cells, cell cultures, etc). The last, but most important, limitation of the chip is that it operates in a bipolar configuration.

In other words the measured current is impacted not only by the unknown impedance Z_x but also by the artifact impedances that exist at the interface between each electrode and the medium. These impedances can be very high when compared to the unknown impedance Z_x, especially at low frequencies. It is not rare that, in some situations, the interface impedances are so high that a bipolar measurement only 'sees' these impedances and is completely insensitive to the medium impedance to be sensed. So, it is often necessary to reduce the effects of these interface impedances. For this purpose, one common solution is to use a four-electrode (tetrapolar) approach. Generally, in the classical bipolar configuration, the polarizing voltage is known and the current flowing through the medium is sensed, but, as mentioned before, the interface impedances significantly affect the measured current and can lead to a large measurement error. In the four electrodes approach, the current flowing through the sample, between the two polarizing electrodes, is known while the voltage between the two other electrodes is measured with a high input impedance instrumentation amplifier. Because almost no current flows through the measuring electrodes, the sensed voltage is almost insensitive to the interface impedances at the measuring electrodes. Consequently, one can deduce the impedance Z_x between the measuring electrodes from the knowledge of the current I and the measurement of the voltage V, with minimal impact from the interface impedances.

3. AD5933 extension circuit

Extensions were made to correct the main drawbacks of the AD5933 chip for its use in bioimpedance applications. Mainly, adaptation was required to operate in a four-electrode configuration. As mentioned before, the four electrode measurement relies on knowledge of the current flowing through the polarizing circuit. This current can be quantified either by using a current source generator or by directly measuring it. The AD5933 could be adapted to generate a current by adding a voltage to current converter at the output of the circuit. In that case, the current flowing through the circuit would be known while the voltage difference between the measuring electrodes could be sensed with an instrumentation amplifier and then converted to a current in order to be measured on the V_{in} input of the AD5933. This approach has already been proposed (Seoane *et al* 2008). It is a simple method for adapting the AD5933 to the four-electrode configuration. However, even if it can be easily implemented for a given range of frequencies and for a given range of impedance to be measured, the stability of the current source is not easy to maintain as both the excitation frequency and the measured impedance can vary greatly. In this case, the tuning of the current source would require a more complex approach (Rigaud *et al* 1996), that can increase the overall complexity and consequently the size of the adaptation circuit. In the proposed solution presented here, a voltage excitation strategy is implemented but measurements of both the current flowing through the sample and the voltage across the measuring electrodes are made, in a two step process. The approach is depicted in figure 2.

The circles labeled 1 and 4 represent the polarizing electrodes and the circles labeled 3 and 4 are the measuring electrodes. The excitation signal from the AD5933 chip is first attenuated and dc filtered resulting in a low output impedance, alternating excitation signal with an adjustable amplitude (20–200 mVpp) and frequency (1–100 kHz). The current flowing through the device under test (DUT) is measured on electrode 4 with a current to voltage converter, while the voltage across the measuring electrodes 2 and 3 is measured with an instrumentation amplifier. Both signals are then amplified with a digitally selectable gain stage resulting in the two voltages V_v and V_i (see figure 2). An analogue multiplexer is used to select, alternately, the voltage or current measurement (respectively V_v or V_i). The selected voltage is then converted to a current in order to be measured by the AD5933 chip. For each position

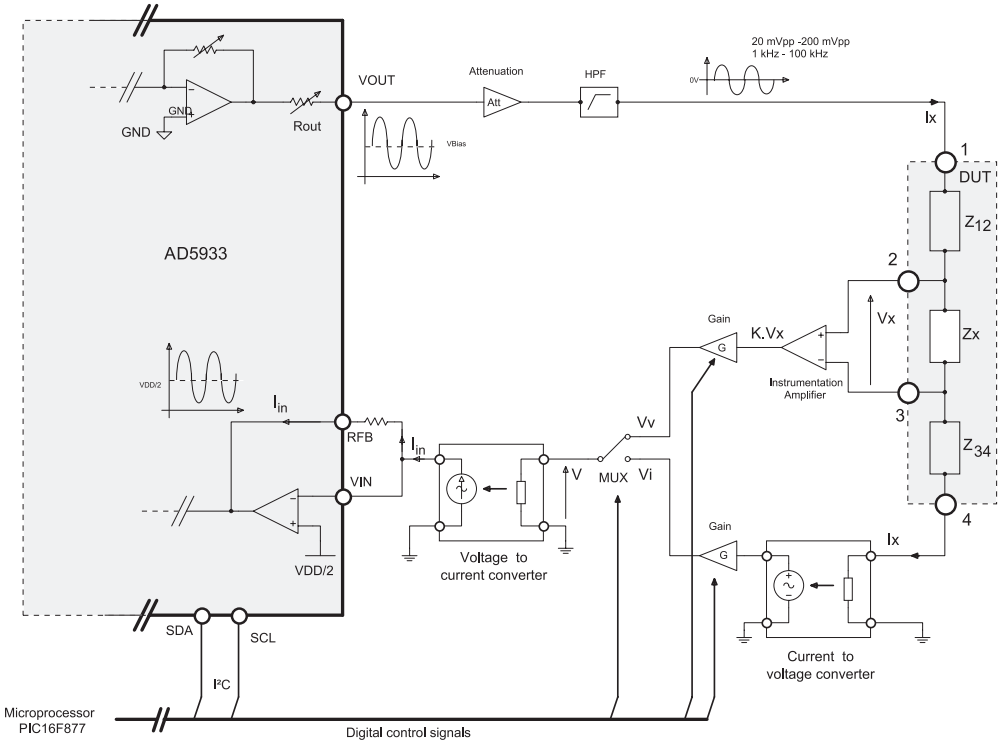

Figure 2. Extension circuit proposed for the AD5933.

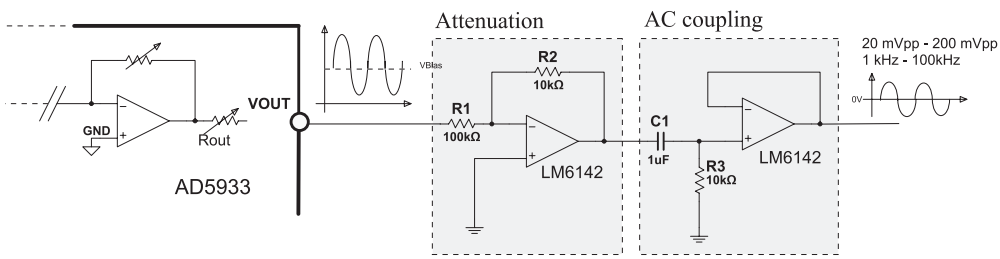

Figure 3. Attenuation and ac coupling stage for the AD5933.

of the analogue multiplexer, one AD5933 acquisition is achieved. The impedance value can then be easily calculated from the knowledge of the voltage and current measurements. The different parts of the design are detailed hereafter.

3.1. Attenuation and ac coupling

As mentioned in section 2.2, the excitation signal must be attenuated and filtered from any bias voltage before it can be applied to the medium. As shown in figure 3, the attenuation stage is obtained by using an operational amplifier (part LM6142) in an inverted configuration. When the resistors R_1 and R_2 used, the signal is attenuated by a factor 10. The attenuated signal is then applied to a first order high-pass filter to remove the bias voltage. Finally, the signal

is buffered through a follower stage. In that way, the output impedance actually seen by the medium is very low, and consequently, will not affect the voltage applied to the medium. This adds robustness as compared to the AD5933 used alone for which impedance output can be as high as 2.4 kΩ.

3.2. Voltage measurement

The voltage between electrodes 2 and 3 is measured with the instrumentation amplifier AD8250 from Analog Devices. Because the impedances between electrodes 2 and 3 can be small when compared to the whole impedance of the medium (including electrode–medium impedances), the common mode voltage can be significant. Consequently, a high common mode rejection is required for the instrumentation amplifier. The AD8250 has the advantage of having a high common mode rejection rate, higher than 110 dB in low frequency, and higher that 80 dB for the maximal frequency of interest for our system (100 kHz). Furthermore, the input voltage noise of the amplifier is about 18 nV $Hz^{-1/2}$, which is relatively low. This is important because the differential voltage to be measured can be very small depending on the impedance value of the medium and the geometric configuration of the electrodes. Another important consideration is that the input impedance of the amplifier must be high when compared to the electrode–medium interface impedances. Therefore, only a negligible current flows through them and the voltage measured will not be affected by their presence. Metal–medium impedances must be eliminated in order to benefit from the four electrode configuration. The input impedance of the AD8250 is about 5.3 GΩ which is much higher than metal–medium impedances that can be encountered in many situations. In addition, the AD8250 has a digitally programmable gain that can be set to 1, 2, 5 or 10, this adds flexibility to fit different impedance measurement situations. Additionally, the bandwidth of the amplifier is high (about a few MHz for a gain of 10), and the gain frequency response is flat for the whole frequency range of interest (4–100 kHz).

3.3. Current to voltage converter

The measurement of the current flowing through the medium is achieved by using a classical transimpedance amplifier as depicted in figure 4. The operational amplifier used for this purpose is the AD8034 which is a high bandwidth (80 MHz) FET input operational amplifier. This amplifier has a low noise input current and voltage (respectively 0.7 fA $Hz^{-1/2}$ and 11 nV $Hz^{-1/2}$). For the conversion resistor used ($R_x = 10$ kΩ), the additional capacitor Cx allows the application of a cut-off frequency to limit the noise bandwidth. The configuration used allows the measurement of currents down to a few μA in the whole bandwidth with an almost flat frequency response.

3.4. Amplification stage and channel selection

The voltages obtained from the measurement of the voltage and the current(V_v and V_i) are applied to the additional amplification stage depicted in figure 5. Each voltage is first high pass filtered to eliminate any offset from the previous stage, then amplified with a non-inverting amplifier configuration with a gain factor of about 5.7 with the resistors chosen. Next, a second similar amplification stage for which the feedback resistor can be shorted with a digital analogue switch (part ADG1221 from Analog Devices) rendering the gain selectable to 5.7 (when the switch is open) or 1 (when the switch is closed) giving for the whole amplification stage a selectable gain of about 32 or 5.7. Note that the amplification stages are exactly the

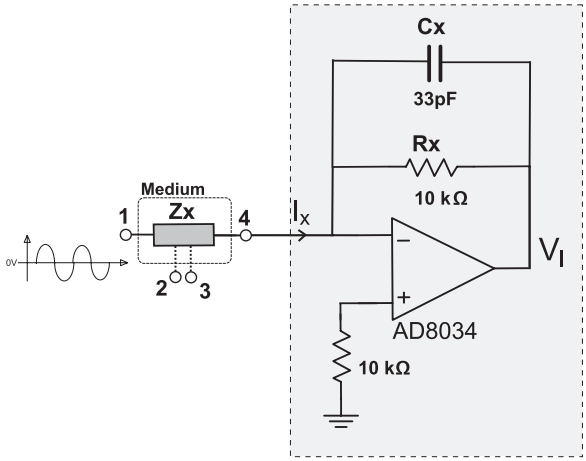

Figure 4. Current measurement stage.

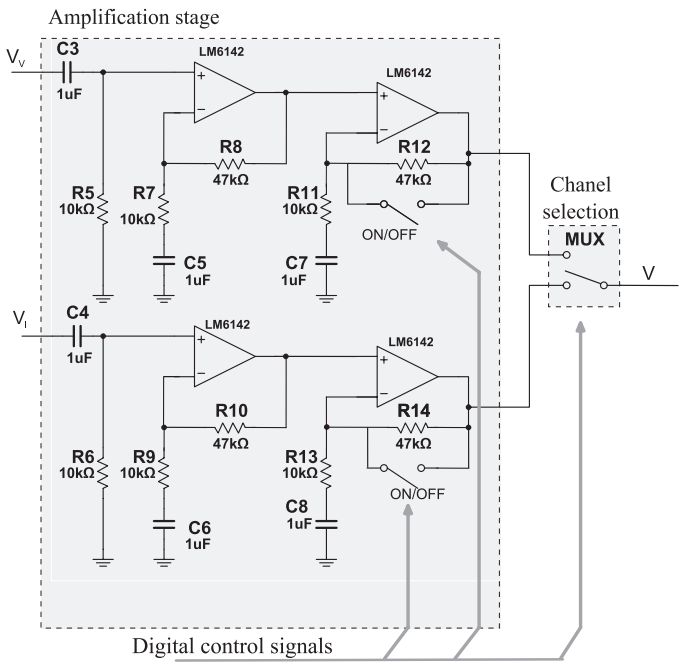

Figure 5. Amplification stage and channel selection.

same for the voltage V_v representing the differential voltage measured between electrodes 2 and 3 (output of the instrumentation amplifier) and V_i representing the current measured through of the medium (output of the current to voltage converter).

Both voltages (V_v and V_i) are inputted to an analogue multiplexer, digitally controlled to alternately select the current or voltage measurement, and then processes the impedance calculation. The analogue multiplexer, part ADG1219 from Analog Devices, can operate in

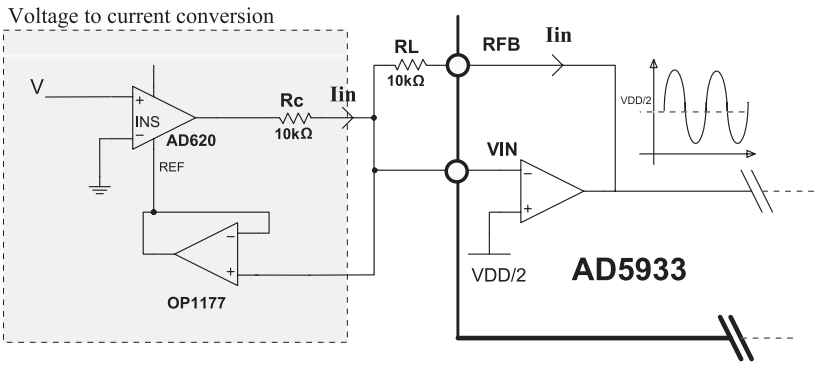

Figure 6. Voltage to current conversion.

the wide operating voltage supply range (±15 V) and has a low R_{on} resistance of about 120 Ω and a low off capacitance of 2.5 pF. It is important to note that because the signals coming through the multiplexer inputs come from low impedance output stages and the output of the multiplexer goes to a high impedance input stage, the R_{on} resistance does not have a critical impact on the performance of the system. On the other hand the capacitor C_{off} can add cross capacitive coupling between the two voltages V_v and V_i. This can induce an influence of the current in the voltage measurement or inversely. Typically if, Z_{off} is the impedance modulus of the C_{off} capacitor at a particular frequency, and if Z_{off} is high as regard to R_{on}, the contribution of the unselected signal to the selected signal can be approximated by R_{on}/Z_{off} that is to say $2\pi f R_{on} C_{off}$ where f is the considered frequency. Calculating this value at the highest frequency of interest (100 kHz) leads to a cross coupling factor of about 19×10^{-3}% from the unselected to the selected signal, which remains low and should not significantly affect the overall precision.

3.5. Voltage to current conversion

The AD5933 chip is designed to apply a voltage to the unknown impedance, measure and analyze the current flowing through the impedance. In our case, both the voltage across electrodes 2 and 3 and the current flowing from electrode 1 to 4 must be measured and analyzed to calculate the impedance. Because the image of the current or the voltage appearing at the output of the multiplexer is always a voltage, an intermediate stage is necessary to convert this voltage to a current that can be measured by the AD5933 chip. A first idea would be to build an inverting amplifier around the operational amplifier integrated in the AD5933 chip (connected to pin RFB and VIN, see figure 2) by connecting a resistor between the pin RFB and VIN (let say R_1) and another resistor (let say R_2) between VIN and the voltage output of the multiplexer (V). But, since the positive input of the operational amplifier integrated in the AD5933 chip is internally connected to VDD/2 (see figure 2), this inverting amplifier configuration would lead to an amplification of the bias voltage that would drastically affect the measurement dynamic range. Even a unity gain in this configuration ($R_1 = R_2$) would lead to a saturation because of the amplification of bias voltage (by the factor $(1+R_1/R_2)$). In our system, the voltage to current conversion is achieved by using the configuration depicted in figure 6. An instrumentation amplifier is fed with the voltage to convert (the output of the multiplexer) and its differential output voltage is applied to the conversion resistor R_c. This produces a current I_{in} proportional to the voltage applied than can be then converted to a

voltage with the AD5933 integrated transimpedance amplifier and its feedback resistor RL. The use of the instrumentation amplifier AD620 is a way to convert the grounded voltage V to an alternative positive voltage varying around VDD/2, applied across R_c, resulting in a positively varying current I_{in}. The output voltage of the integrated operational amplifier can thus be maintained in a coherent dynamic range (0 to VDD). This bias adjustment is obtained by driving the reference input of the AD620 amplifier with the VIN voltage holding the bias voltage VDD/2.

3.6. Impedance calculation and calibration procedure

In its normal use the AD5933 allows a sweep of the frequency of the excitation signal in order to estimate the spectral power of the sampled current for each corresponding excitation frequency. The expression of the complex value $\underline{X}(f)$ of the TFD coefficient calculated for each frequency is given by the equation (1),

$$\underline{X}(f) = \sum_{n=0}^{1023} x(n) \cdot (\cos(2\pi f \cdot n \cdot T_e) - j\sin(2\pi f \cdot n \cdot T_e)) . \tag{1}$$

In this equation $x(n)$ are the samples of the current measured (1024 samples per acquisition) and $\cos(2\pi f \cdot n \cdot T_e)$ and $\sin(2\pi f \cdot n \cdot T_e)$ are the test samples provided by the internal DDS core of the AD5933. In our situation, we obtain two complex coefficients $\underline{X}_v(f)$ and $\underline{X}_i(f)$ for each excitation frequency corresponding respectively to the voltage measurement between electrodes 2 and 3 and the current measurement at electrode 4 obtained in the two step process. Note that in practice both the voltage and current are measured with a low gap time in order to prevent drifts that could affect the voltage and current measured. Considering that the AD5933 associated with the extension circuit does not introduce nonlinear distortions, each of these coefficients are linked to the actual values of the voltage and the current by:

$$\underline{X_v}(f) = \underline{K_v}(f) \cdot \underline{V_x}(f) \tag{2}$$

and:

$$\underline{X_i}(f) = \underline{K_i}(f) \cdot \underline{I_x}(f) \tag{3}$$

where $\underline{K_v}(f)$ and $\underline{K_i}(f)$ are complex gain factors depending on the gain settings and imperfections of the measurement chain. Notice that $\underline{K_v}(f)$ and $\underline{K_i}(f)$ can be frequency dependent.

So the impedance $\underline{Z_x}(f)$ between electrode 2 and 3 is:

$$\underline{Z_x}(f) = \frac{\underline{V_x}(f)}{\underline{I_x}(f)} = \frac{\underline{X_v}(f)}{\underline{X_i}(f)} \cdot \frac{\underline{K_i}(f)}{\underline{K_v}(f)} = \frac{\underline{X_v}(f)}{\underline{X_i}(f)} \cdot \underline{K}(f) \tag{4}$$

where $\underline{K}(f)$ is the complex calibration factor that must be deduced (for each frequency) from the measurement of a known test impedance. Typically, before each measurement, the vector $\underline{K}(f)$ is deduced from a measurement on the test circuit depicted in figure 7. This test circuit includes three identical impedances $\underline{Z_x}$ to simulate both the impedance between the measuring electrodes 2 and 3 and between the polarizing and measuring electrodes (1 and 2, 3 and 4). The interface impedances $\underline{Z_i}$ between the different electrodes and medium are also simulated in the calibration test circuit. Because of their high modulus impedance values in low frequency, interface impedances can have a significant impact on the precision of the system because they tend to reduce the current and the voltage difference to be measured, while increasing the common mode voltage seen by the instrumentation amplifier. So, it is important to take them into account in the calibration process. Given this calibration circuit that must be ideally

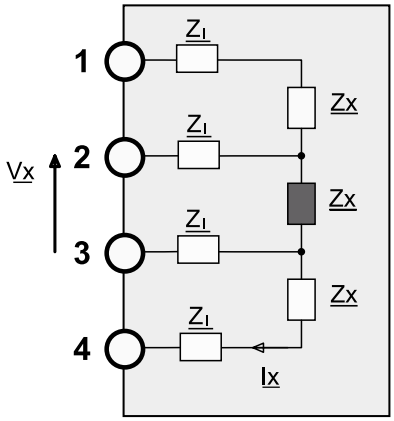

Figure 7. Typical calibration circuit.

chosen close to the real impedance configuration, the complex calibration vector $\underline{K}(f)$ can be deduced by:

$$\underline{K}(f) = \underline{Z_x}(f) \cdot \frac{\underline{X_i}(f)}{\underline{X_v}(f)}. \tag{5}$$

4. Performances evaluation

The efficiency of the impedance measurement system has initially been evaluated by measuring discrete passive components. The test circuits represented in figure 7 are connected to the system. The interface impedances $\underline{Z_i}$ are simulated with 10 nF capacitors, which correspond to a simple approximation of common situations, and the impedances $\underline{Z_x}$ representing the impedances between the different electrodes, are replaced by different test circuits (combination of resistors and/or capacitors). To mimic a practical situation where the real circuit is not clearly predictable, the circuit used during the calibration procedure is chosen slightly different from the test circuit. Indeed, the impedance $\underline{Z_x}$ are replaced by 470 Ω resistors, which correspond to the middle range value of the resistors measured, and the interface impedances $\underline{Z_i}$ are replaced by 2.2 kΩ resistors, which correspond to the middle range value of the 10 nF capacitor impedance modulus, in the considered frequency range (4–100 kHz).

The measurement errors of the system, when the impedances $\underline{Z_x}$ are simply replaced by resistors are represented in figure 8, for the lowest and highest frequency of the range (4 and 100 kHz). These errors have been estimated on the basis of 20 successive acquisitions for each resistor considered. As can be seen in figure 9, the measurement system gives a good level of accuracy. The modulus error does not exceed 1.5% at 4 kHz and is slightly higher at 100 kHz, for resistor values ranging from 100 Ω to 10 kΩ. The error in the phase remains below 0.2° at 4 kHz, and slightly more than 1° at 100 kHz. In addition, the reproducibility, represented by the error bars on figure 8, seems to be the lowest for the 10 kΩ resistor. This is not surprising because this resistor value is much higher than the value of the resistor used during the calibration procedure (470 Ω). The electrical model of a biological medium can take several forms which are more complicated than a single discrete resistor. Some impedance spectrums acquired on different test circuits are represented in figure 9. For all these test circuits, good accordance is observed

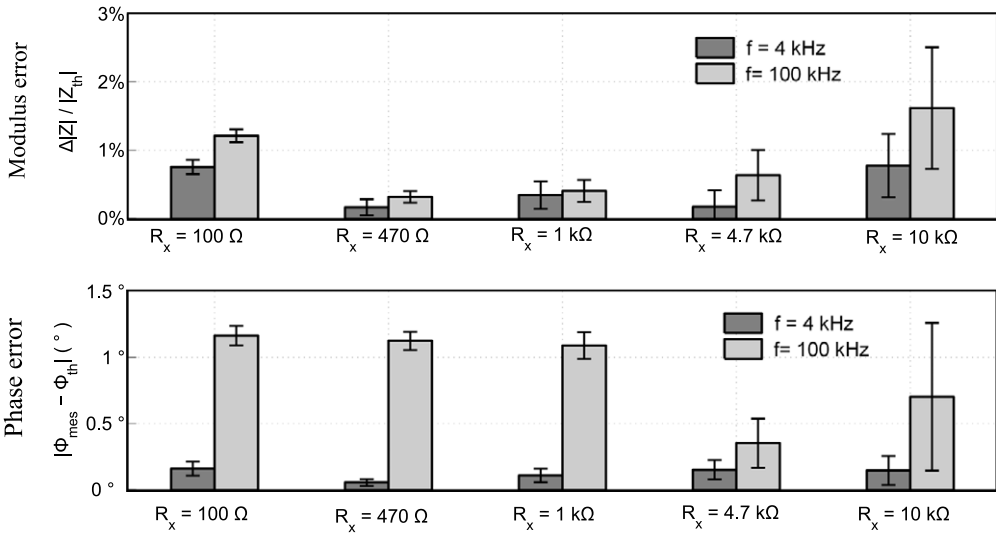

Figure 8. Modulus and phase errors obtained on resistive circuits, $\underline{Z_x} = R_x$.

between the calculated and measured spectrum. The impedance spectrum, obtained on the 220 Ω resistor in parallel with the 770 pF capacitor, highlights the accuracy limits of the system because the corresponding phase and modulus variation to be measured are in the same range as the measurement errors. However, the measurement made on the different test circuits gave a sufficiently good precision for considering the use of the impedance measurement system in a practical impedance measurement application.

5. Application to the characterization of small physiological samples

The efficiency of the impedance measurement system has been evaluated by measuring small ionic solution samples (50 μl) with tetrapolar microelectrodes. The microelectrodes used are provided by the company Abtech. They are represented in figure 10.

The microelectrodes consist of four platinum microbands, 20 μm wide and 3 mm long, separated from other with a 20 μm gap. A partial microscopic view of the electrodes is shown on figure 10(b). In figure 10(a), the electrodes can be seen recovered with a drop of the physiological sample being measured. The benefit of the four electrodes approach can be clearly observed when comparing it to the classical bipolar configuration. In figure 11, the impedance spectrums obtained when a physiological sample ($\sigma = 0.4$ S m^{-1}) is deposited on the electrodes are plotted for the two situations (bipolar and tetrapolar).

The bipolar situation is obtained by simply connecting the measuring electrodes 2 and 3 (see figure 2) simultaneously to the excitation and the measurement circuit. The bipolar measurement (in dotted lines) shows characteristic behavior. The modulus is high for low frequencies and decreases with increasing frequency. The phase is negative and high for low frequencies and also decreases with frequency. This is typical behavior observed when the measurement is dominated by the artifact electrode–medium impedance (Grimnes and Martinsen 2000). For the bipolar measurement, it was impossible to discriminate the impedance due the medium itself because the interface impedances dominate for almost the whole frequency range. Conversely, for the tetrapolar measurement (continuous lines), the phase is close to 0° in the low frequency range and varies only slightly with frequency. The impedance

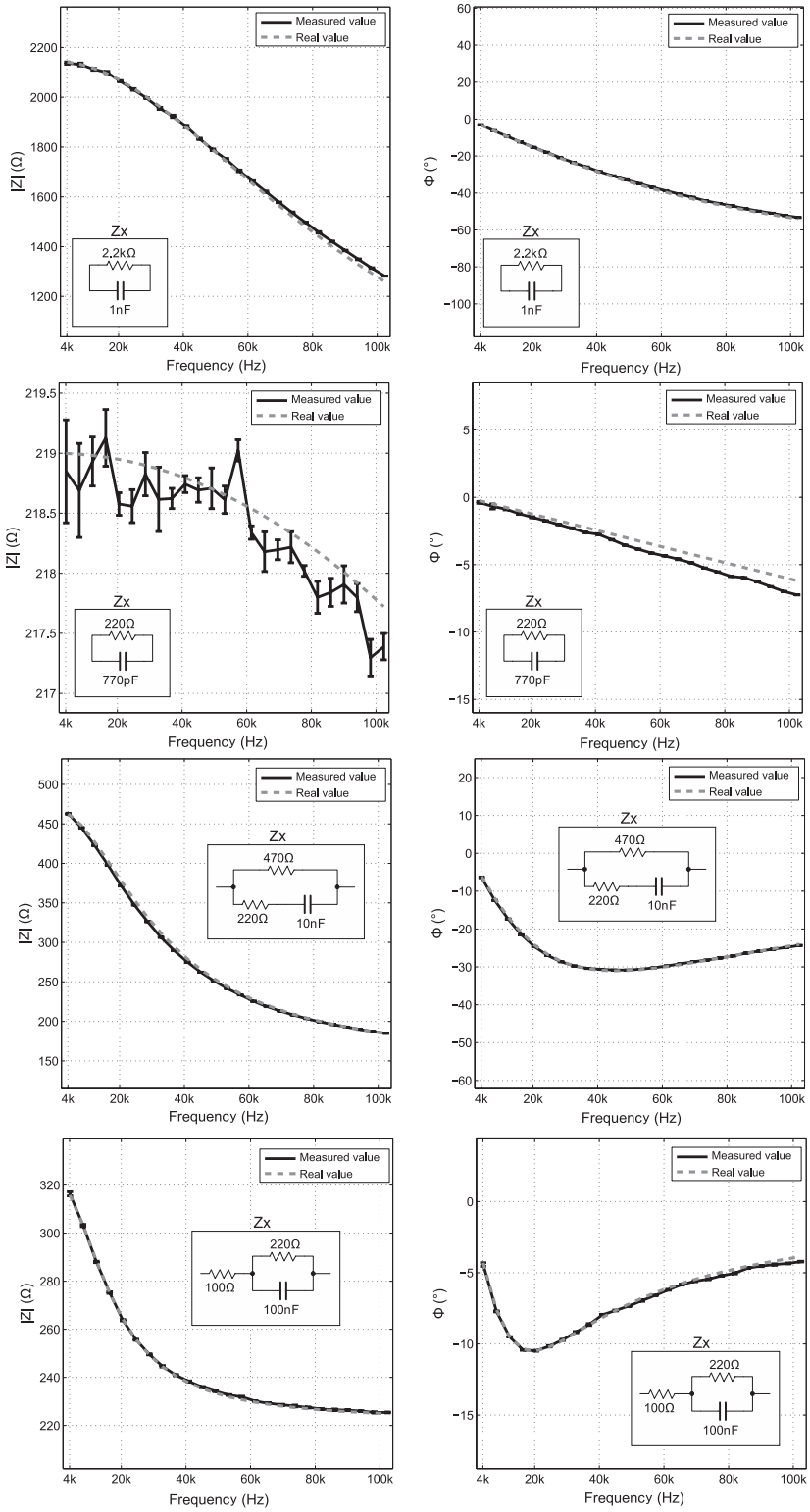

Figure 9. Comparison of calculated and measured impedance spectrums for different test circuits.

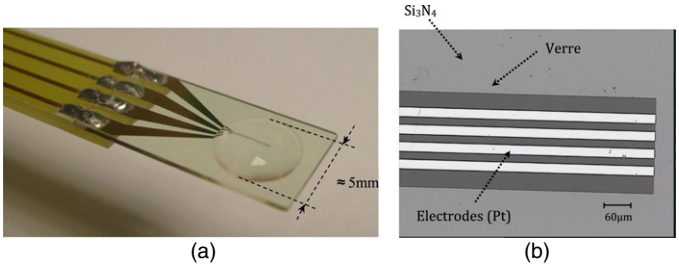

Figure 10. (a) Photograph of the electrodes matrix attached to its PCB and recovered with an ionic solution drop (b) Microscopic view of the four microband electrodes.

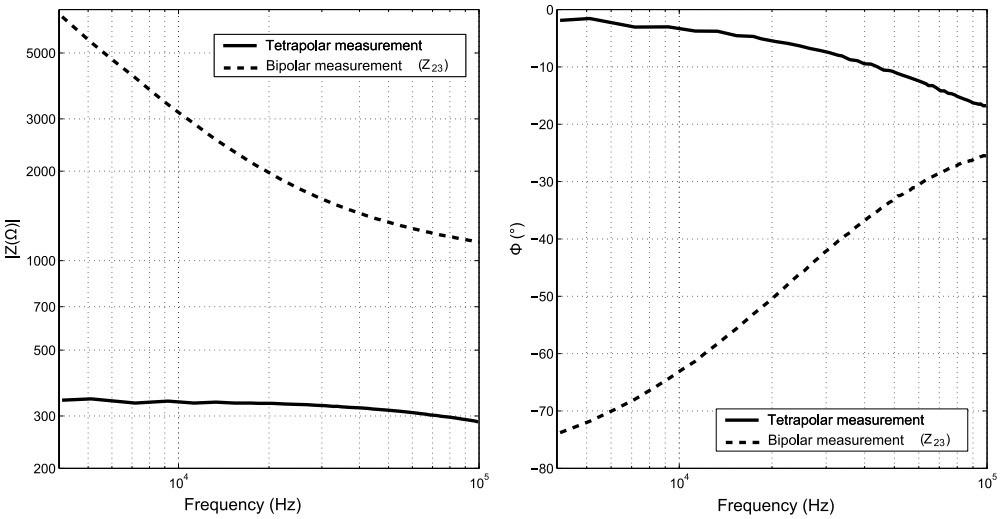

Figure 11. Comparison between bipolar and tetrapolar measurements.

modulus is also relatively stable for the whole frequency range. This observation is coherent with the almost purely conductive behavior of the sample tested and shows the efficiency of the tetrapolar approach implemented to reduce the effect of the interface impedance artifacts. Indeed, the absolute values of the impedance modulus for the bipolar and the tetrapolar configuration are logically not comparable because they do not rely on the same geometric cell factor. The ability of the proposed circuit to discriminate different samples drops, on the basis of their conductivity, has also been evaluated. The impedance spectrums, measured on four samples having conductivities ranging from 0.14 to 1.2 S m^{-1}, are shown in figure 12.

Each curve represents an average of ten successive acquisitions. Similar behavior can be observed for the four measured samples, that is a stable modulus in the low frequency range and a slight decrease for high frequencies with a corresponding slight phase drop. Focusing on the low frequency range, good accordance was observed between the impedance modulus and the conductivity value. From these measurements, the geometric cell factor, linking the conductivity to the impedance modulus, can be empirically estimated. It gives an average geometric cell factor of 130 m^{-1} with a standard deviation of about 10 m^{-1} if all the samples tested are considered. A numerical estimation of this factor has also been achieved for the considered configuration of electrodes (with a 2D finite elements approach) and has yielded a value of 150 m^{-1}. The slight difference between the theoretical and experimental cell factor

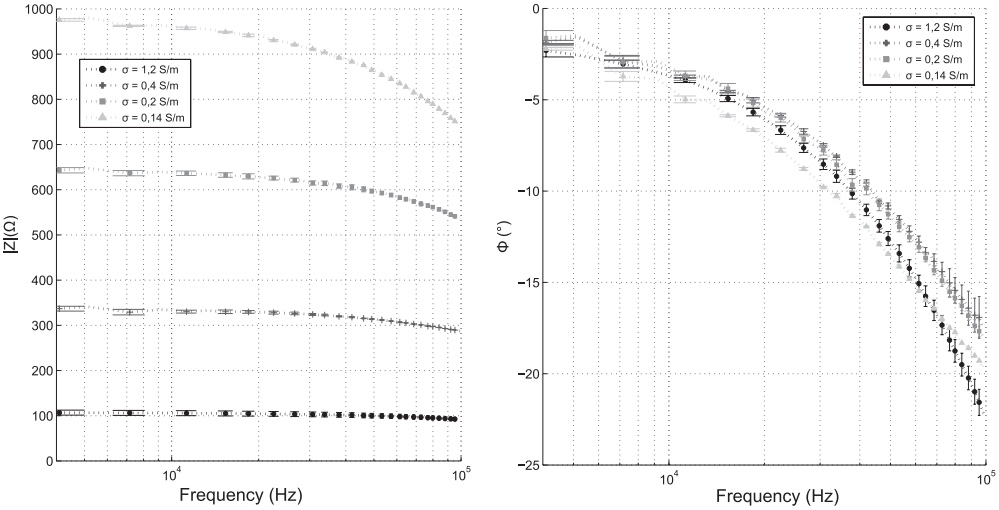

Figure 12. Tetrapolar measurements made on several ionic solutions.

could be explained by side effects and the thickness of the electrodes (not taken into account in the numerical approach). The high frequency range behavior shows a capacitive effect recognizable by an impedance modulus and phase decrease. In a first approach, this behavior could be interpreted as the influence of the sample permittivity that should be close to that of pure water, which is about 80. For any material, the impedance phase can be expressed independently of the geometry as:

$$\Phi = -\arctan\left(\frac{\omega \cdot \epsilon \cdot \epsilon_0}{\sigma}\right). \tag{6}$$

By applying this simple relationship to practical situations in the most phase-sensitive situation (highest frequency and lowest conductivity), the phase decrease observed should be around -2.5°, that is relatively small when compared to the actual phase decrease measured (about -20°, see figure 12). The behavior observed at high frequencies could be attributed to stray capacitive effects between the different electrodes, which are not taken into account by the calibration scheme used. However, the circuit has shown good ability to detect samples with different conductivity with an acceptable signal-to-noise ratio. The presented design is a powerful tool for bioimpedance applications. In addition, in a further development, higher performances could be expected by extending the frequency range.

6. Conclusion

The AD5933 chip is a very attractive solution to consider when designing new embedded impedance measurement applications. However, for the specific case of bioimpedance measurements at microscopic scales, it is subject to some limitations. Mainly, it is very sensitive to artifact impedances at the metal–medium interface. In this paper, the addition of a new extension circuit to the AD5933 is proposed. The extension makes possible the measurement of impedance in a tetrapolar configuration. Measurement errors on test circuits were lower than 2% and, coupled with tetrapolar microelectrodes, the system has been successfully used to easily discriminate between different physiological samples (50 μl) having conductivities ranging from 0.14 to 1.2 S m^{-1}. The circuit proposed is an alternative bioimpedance measurement technique for embedded applications operating in the four electrode configuration.

References

Analog Devices 2007 Evaluation board for the 1 Msps 12-bit impedance converter network analyser *Technical Report* EVAL-AD5933EBZ

Analog Devices 2008 1 Msps 12-bit impedance converter, network analyser *Technical Report* AD5933

Arndt S, Seebach J, Psathaki K, Galla H J and Wegener J 2004 Biolectrical impedance assay to monitor changes in cell shape apoptosis *Biosensors Bioelectron.* **19** 583–94

Ayliffe H E, Frazier A B and Rabbitt R D 1999 Electric impedance spectroscopy using microchannels with integrated metal electrodes *J. Microelectromech. Syst.* **8** 50–7

Bodenstein M, David M and Markstaller K 2009 Principles of electrical impedance tomography and its clinical application *Crit. Care Med.* **37** 713–24

Brennan S 2006 Measuring a grounded impedance profile using the AD5933 *Analog Devices: Application Note* AN-847

Cheung K, Gawad S and Renaud P 2005 Impedance spectroscopy flow cytometry: on-chip label-free cell differentiation *Cytometry* A **65** 124–32

Ehret R, Baumann W, Brischwein M, Schwinde A and Wolf B 1998 Online control of cellular adhesion with impedance measurements using interdigitated electrode structures *Med. Biol. Eng. Comput.* **36** 365–70

Ferreira J, Seoane F, Ansede A and Bragos R 2011 AD5933-based electrical bioimpedance spectrometer. Towards textile-enabled applications *EMBS: 33rd IEEE Annu. Int. Conf. on Engineering in Medicine and Biology Society, (Boston, MA, USA, 30 Aug.–3 Sept. 2011)* pp 3282–5

Ferreira J, Seoane F and Lindecrantz K 2010 AD5933-based spectrometer for electrical bioimpedance applications *J. Phys.: Conf. Ser.* **224** 012011

Foster K R and Schwan H P 1996 Dielectric properties of tissues *Handbook of Biological Effects of Electromagnetic Fields* 2nd edn (Boca Raton, FL: CRC Press) pp 25–102

Gabriel S, Lau R W and Gabriel C 1996 The dielectric properties of biological tissues: II. Measurements in the frequency range 10 Hz to 20 G Hz *Phys. Med. Biol.* **41** 2251–70

Grimnes S and Martinsen O G 2000 *Bioimpedance and Biolectricity Basics* (New York: Academic)

He J, Wang Z, Shi Y, Qin Y, Zhao D and Huang L 2011 *A Prototype Portable System for Bioelectrical Impedance Spectroscopy* (*Sensor Letters* vol 9) (Valencia, CA: American Scientific Publishers) pp 1151–6

Majer L, Stopjakova V and Vavrinsky E 2009 Wireless measurement system for non-invasive biomedical monitoring of psycho-physiological processes *J. Electr. Eng.* **60** 57–68

Mascareas D L 2006 Development of an impedance method based wireless sensor node for monitoring of bolted joint preload *MSc Thesis in Structural Engineering* University of California, San Diego

McAdams E T and Jossinet J 1991 Electrode–electrolyte interface impedance and polarization *Innov. Tech. Biol. Med.* **12** 11–20

McAdams E T and Jossinet J 1995 Tissue impedance: a historical overview *Physiol. Meas.* **16** A1

McAdams E T, Lackermeier A, McLaughlin J A, Macken D and Jossinet J 1995 The linear and non-linear electrical properties of the electrode–electrolyte interface *Biosensors Biolectron.* **10** 67–74

Nadi M 2008 Characterization of biological tissues: constraints related to *ex vivo* measurements *Sensors, Lecture Notes Electrical Engineering (LNEE)* **21** 75–90

Pethig R 1984 Dielectric properties of biological materials: biophysical and medical applications *IEEE Trans. Electr. Insul.* **EI-19** 453–72

Rigaud B, Morucci J P and Chauveau N 1996 Bioelectrical impedance techniques in medicine: part 1. Bioimpedance measurements *Crit. Rev. Biomed. Eng.* **24** 257–351

Schlebusch T, Roithlingshoifer L, Kim S, Kony M and Leonhardt S 2010 On the road to a textile integrated bioimpedance early warning system for lung edema *BSN' 2010: Int. Conf. on Body Sensor Networks (7–9 June 2010)* pp 302–7

Seoane F, Ferreira J, Sanchez J J and Bragos R 2008 An analog front-end enables electrical impedance spectroscopy system on-chip for biomedical applications *Phys. Meas.* **29** S267–78

Seunghee P, Chung-Bang Y and Daniel Inman J 2006 Wireless structural health monitoring using an active sensing node *Steel Struct.* **6** 361–8

Sohm L L, Saleh O A, Facer G R, Beavis A J, Allan R S and Notterman D A 2000 Capacitance cytometry : measuring biological cells one by one *Proc. Natl Acad. Sci.* **97** 10687–90

Thielecke H 2003 Capillary chip based characterization of small tissue samples *Med. Device Technol.* **14** 18–20

Wegener J, Keese C R and Giaver I 2000 Electric cell-substrate impedance sensing (ECIS) as noninvasive means to monitor the kinetics of cell spreading to artificial surfaces *Exp. Cell Res.* **259** 158–66